Assembly Instruction

ITEM NO.: 9623GY/9623BE-2A
(3/4)Armless 2-seater

Legs & hardware are stored in the box, please take out the legs and hardware for assembly.

Note: Do not use power tools for assembly. Power tools increase the risk of over tightening which lead to spliting or cracking the wood.

Chair Component list

No	Drawing	Qty	Description
A	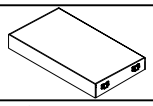	1	ARMLESS SEAT
B		1	BACKREST
C		2	BACK CUSHION
D	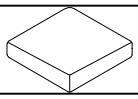	2	SEAT CUSHION
E		4	WOODEN LEGS (120*50*50mm)
F		14	ALLEN BOLT (5/16"*70mm)
G		14	FLAT WASHER (1/4"*Ø19*1.5mm)
H	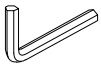	1	ALLEN KEY (M4*59mm)

THE PARTS ARE LOCATED INSIDE THE BOX AS BELOW:

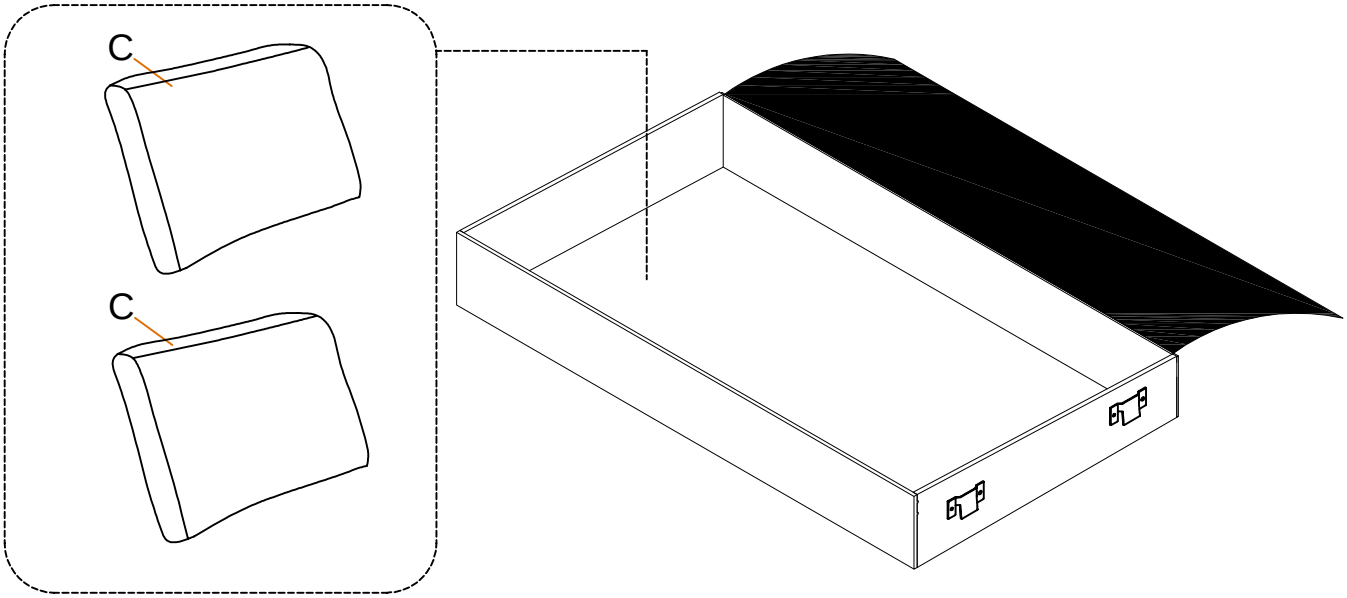

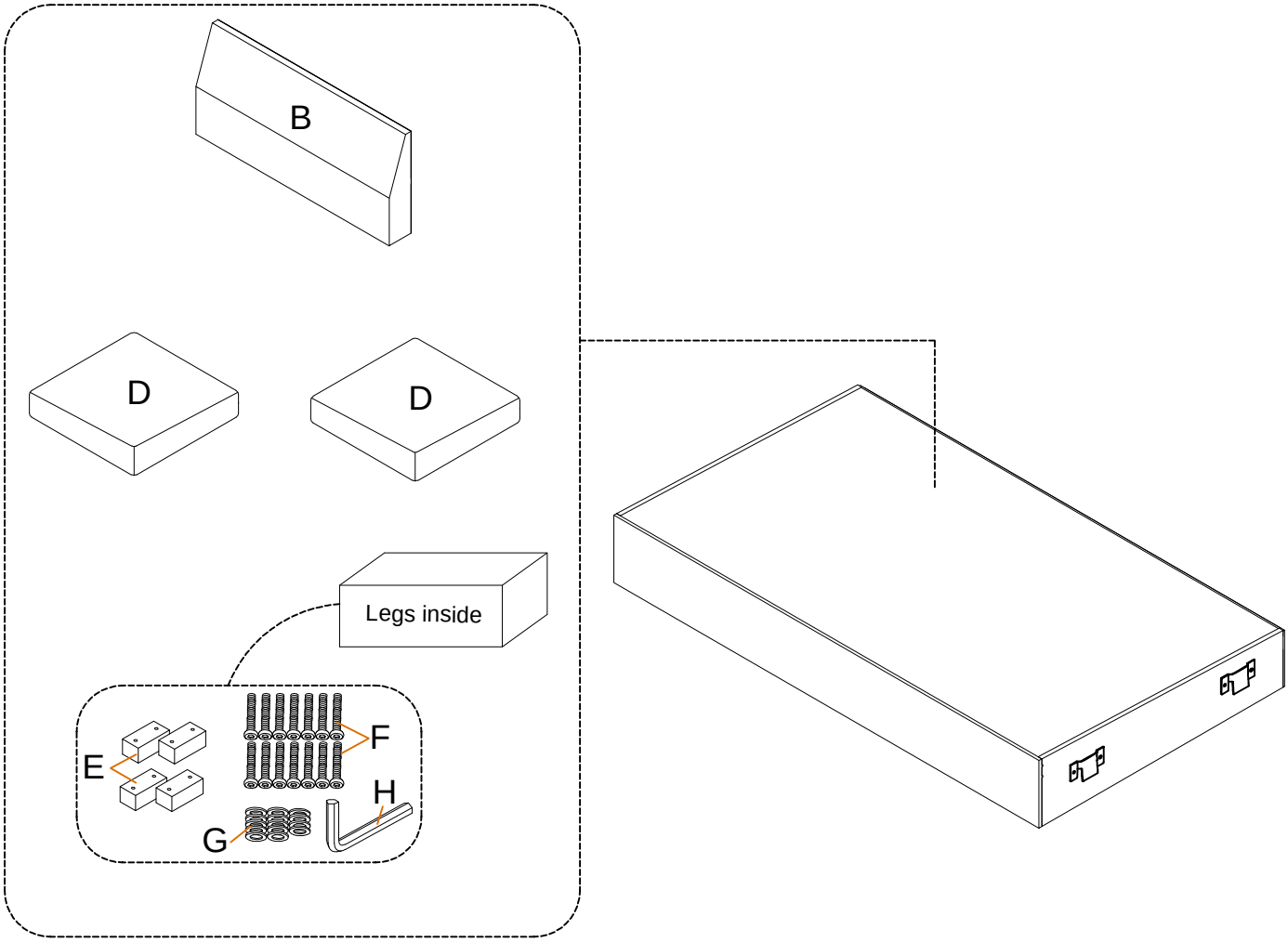

Step #1

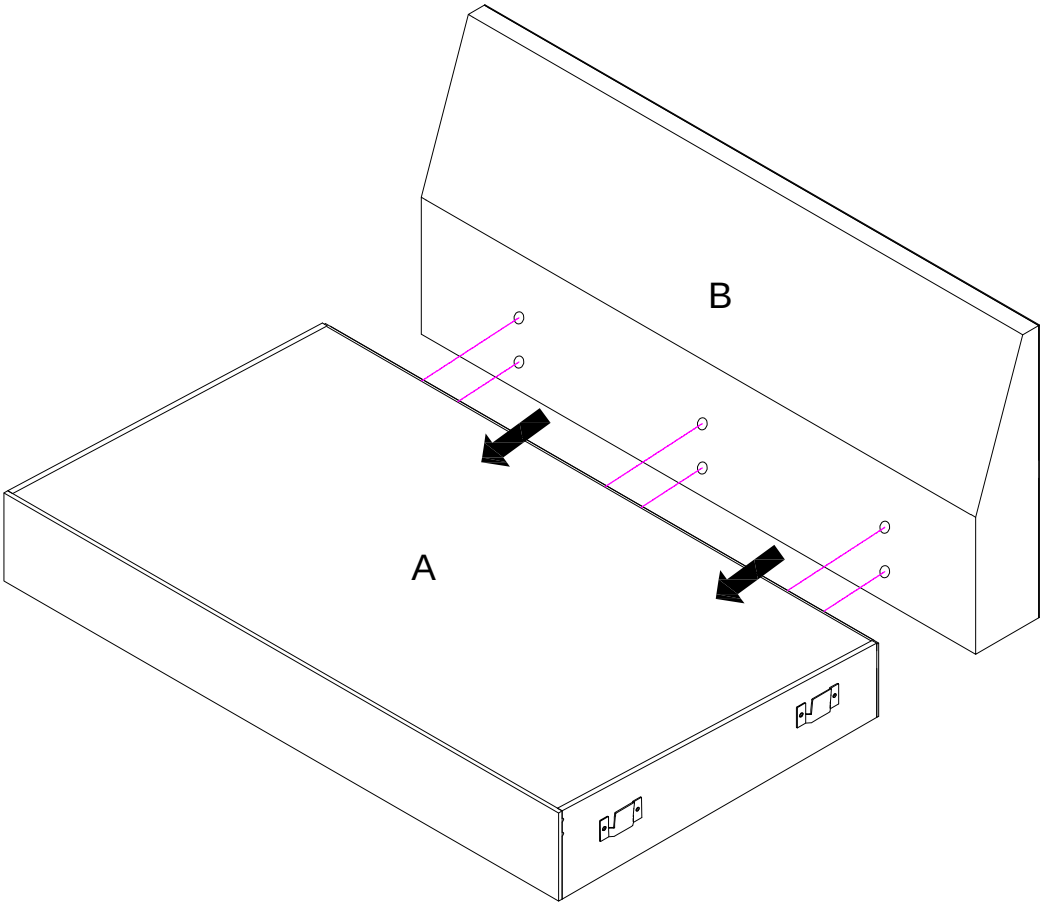

Step #2

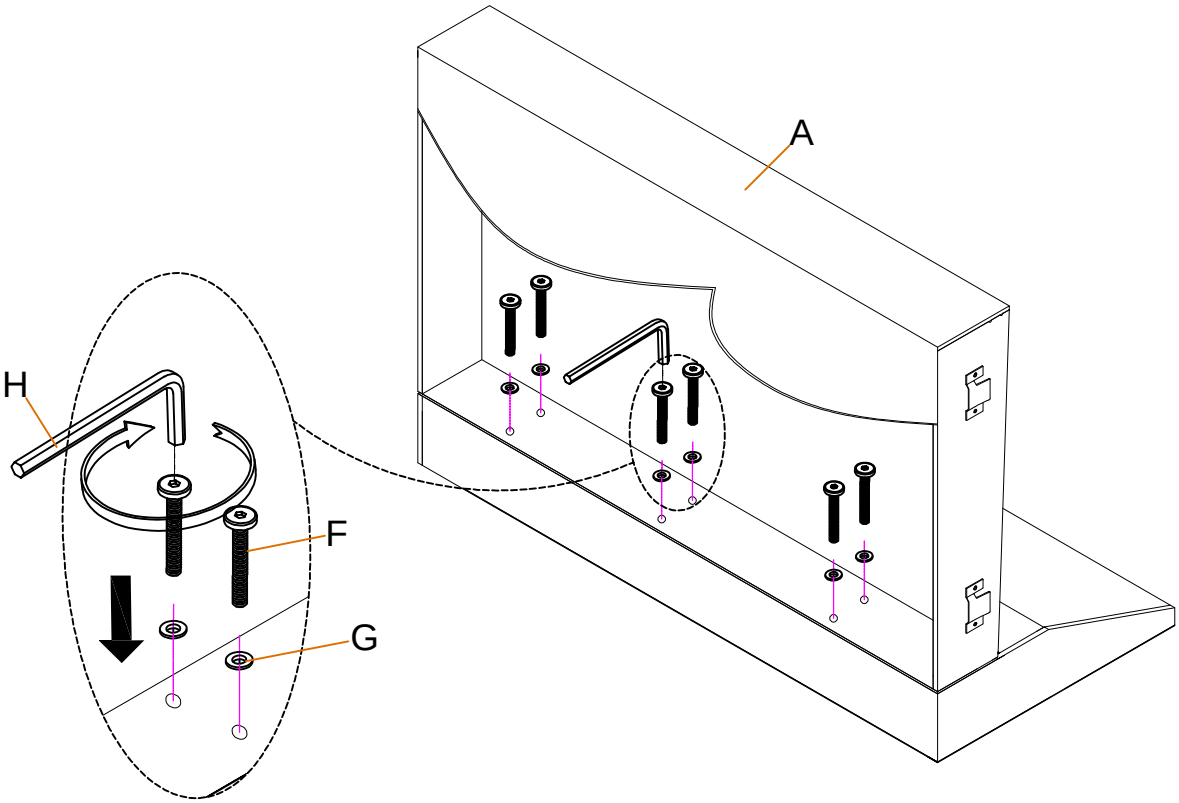

Step #3

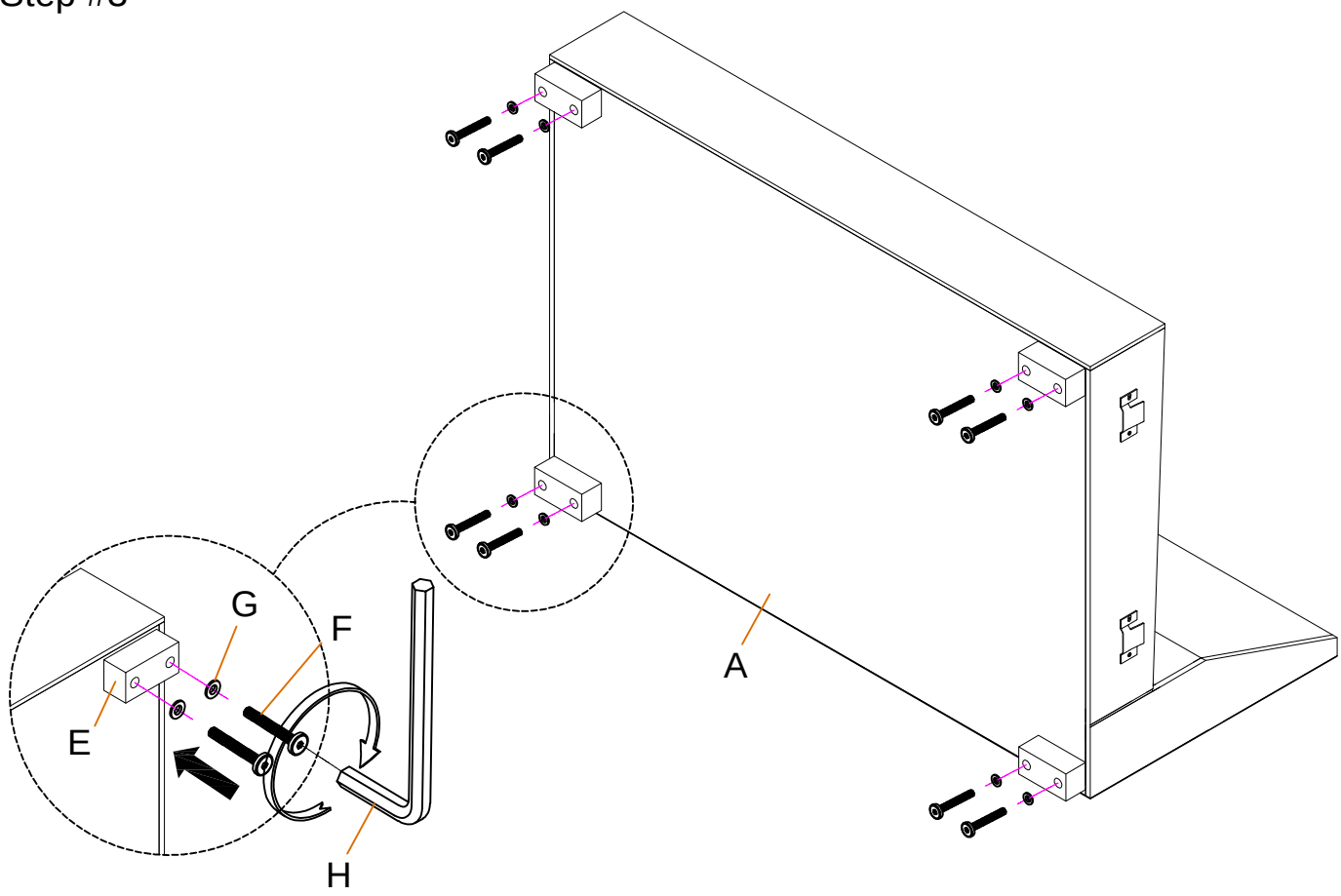

Step #4

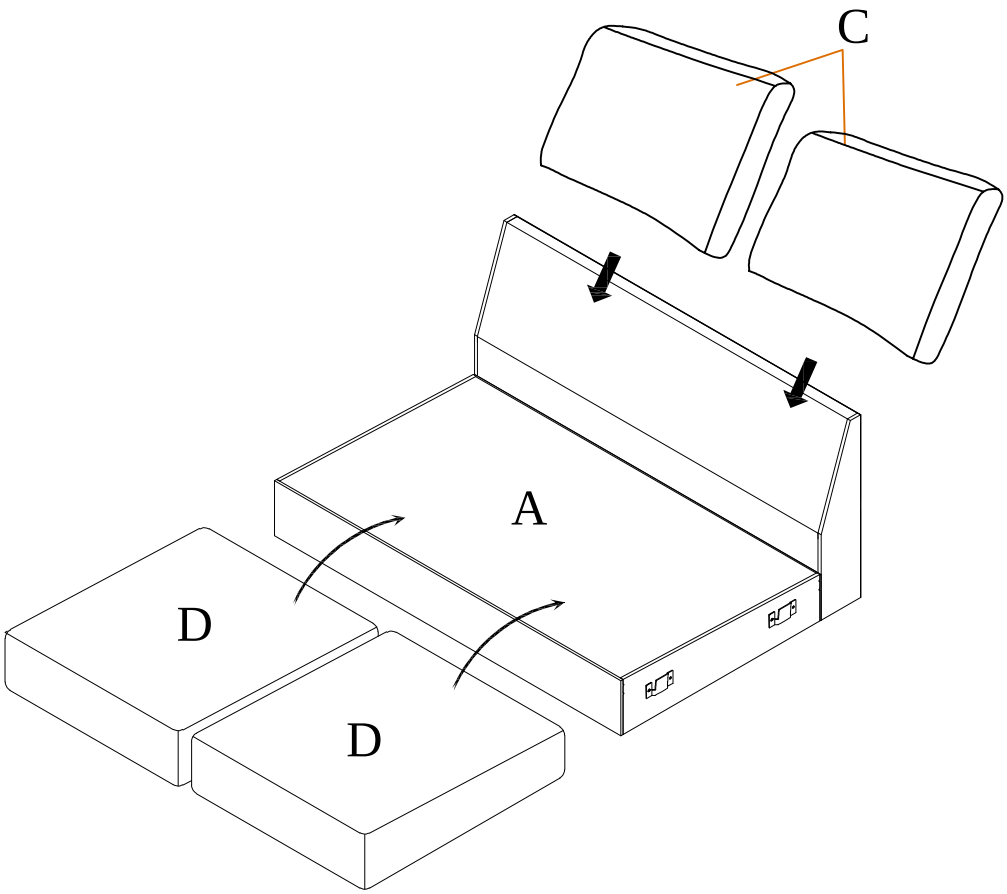

Step #5

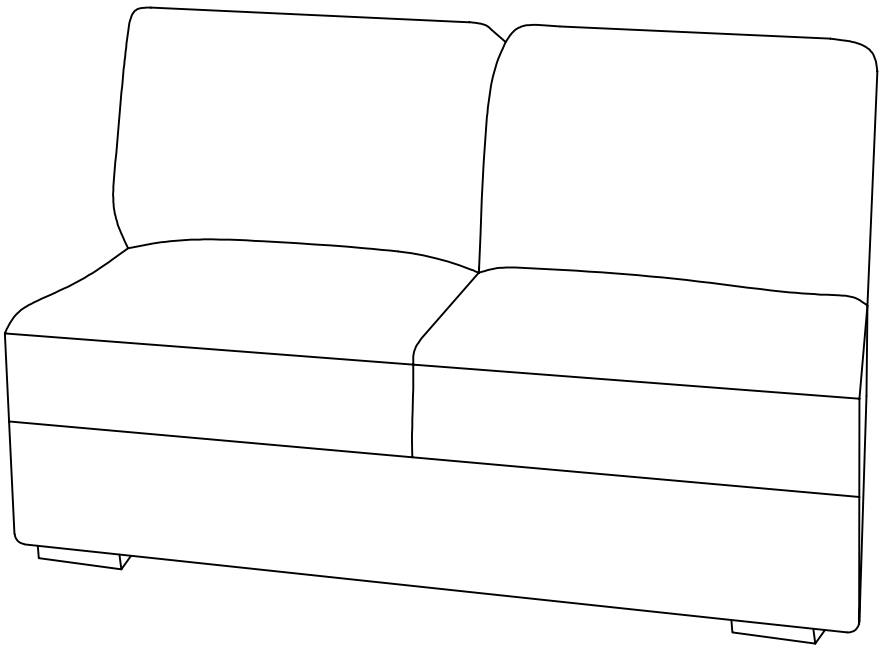

Step #6

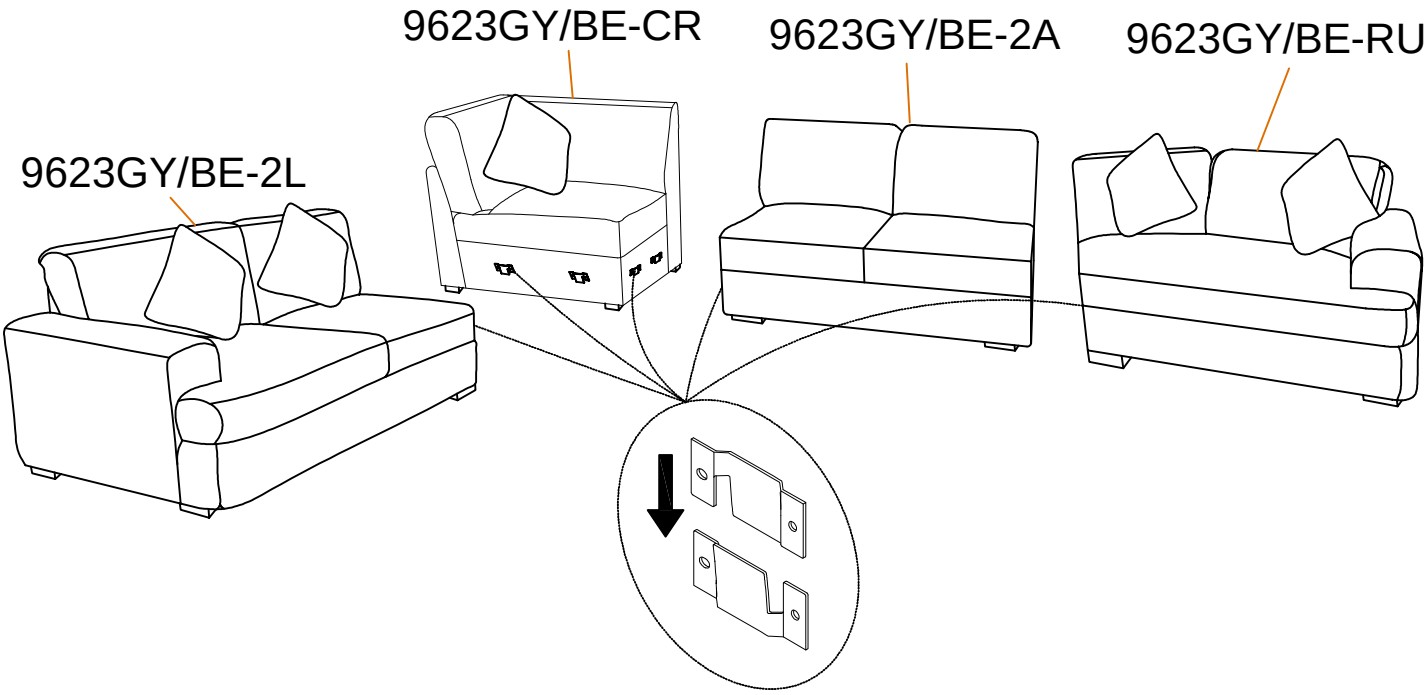

Step #7

Assembly completed.

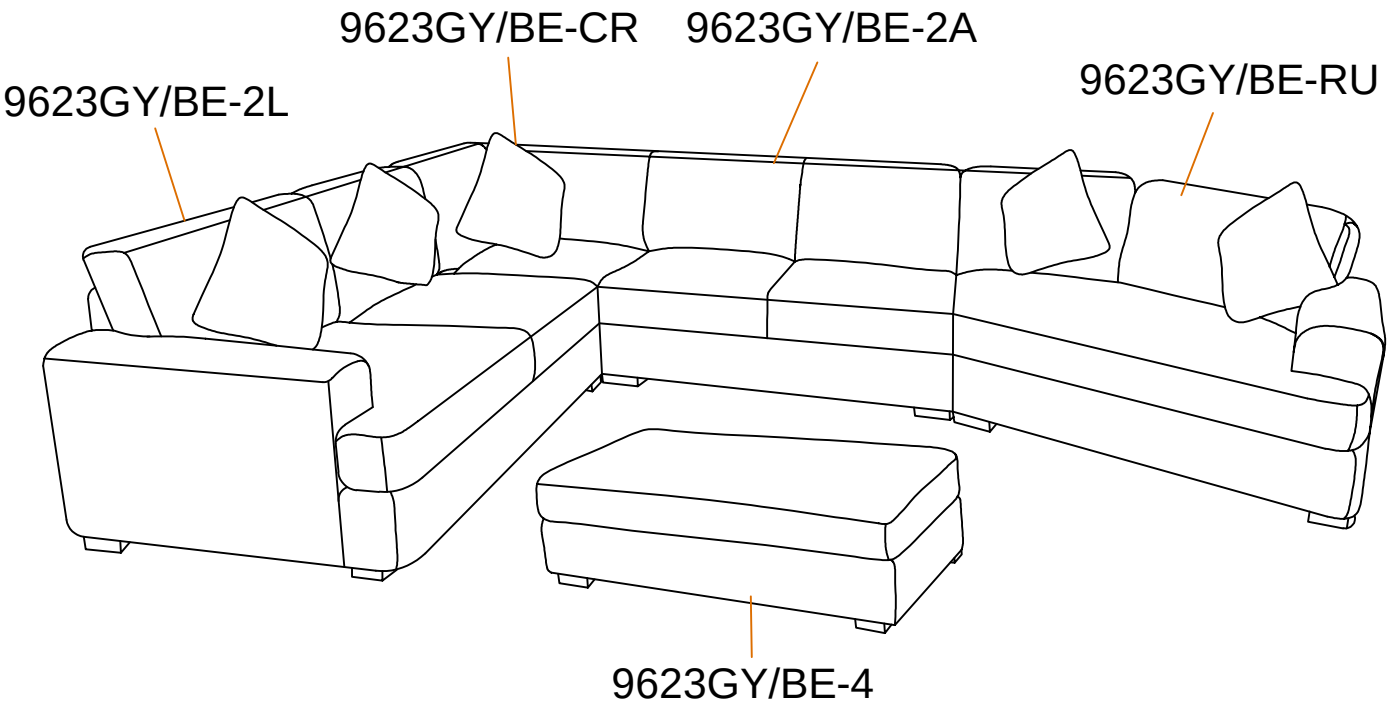

Care Instruction for Corduroy Furniture:

In order to maintain the original appearance of your corduroy, please follow below simple care procedures:

- Avoid exposing furniture directly to sunlight or heating and air conditioning outlets.Sunlight and/or exposure to heating and air conditioning outlets will fade/damage corduroy. Do not place your upholstered furniture too close to windows, radiators, or vents, and be sure to use windows, radiators, or vents.
- Vacuum or wipe with a soft cloth to remove dust.
- Hardware may loosen over time. Periodically check to make sure all connections are tight. Re-tighten if necessary.

For items use on wooden floor, hard surfaces or carpets, it is recommended to Install protective pads under all legs and supports to avoid/prevent from damages/scratches and discoloration.